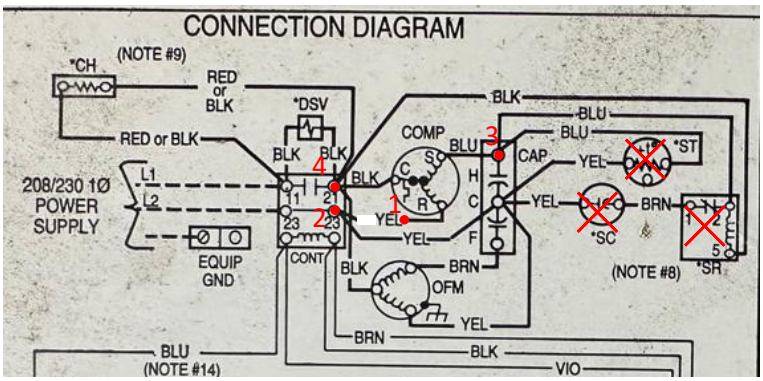

	NuStart
1	RUN
N/C	RUN CAP
2	ACTIVE
3	START WINDING
N/C	NOT USED
4	COMMON