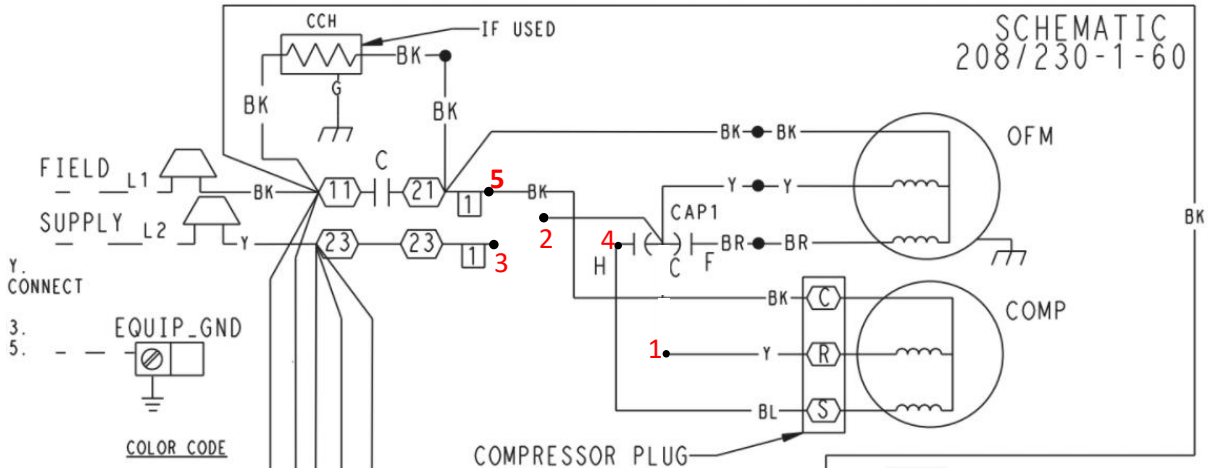

	SureStart
1	RUN
2	RUN CAP
3	ACTIVE
4	START WINDING
N/C	NOT USED
5	COMMON